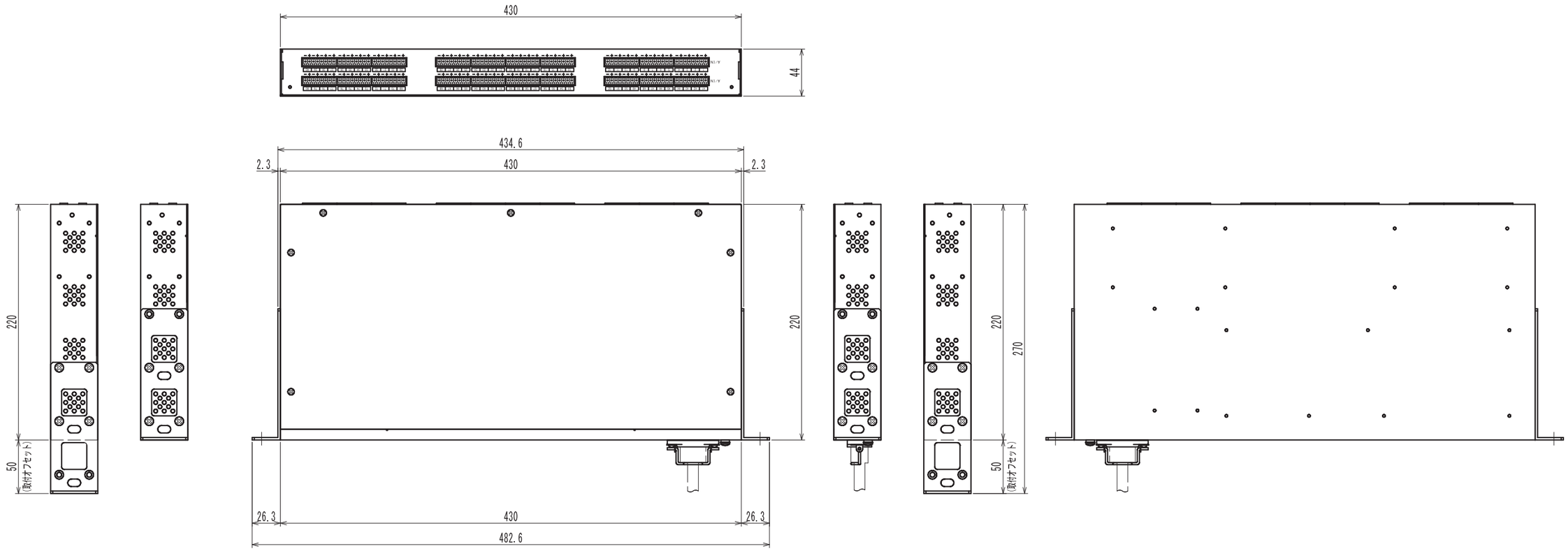
430
44
434.6
2.3
430
2.3
220
220
220
270
50
(取付オフセット)
50
(取付オフセット)
26.3
430
26.3
482.6

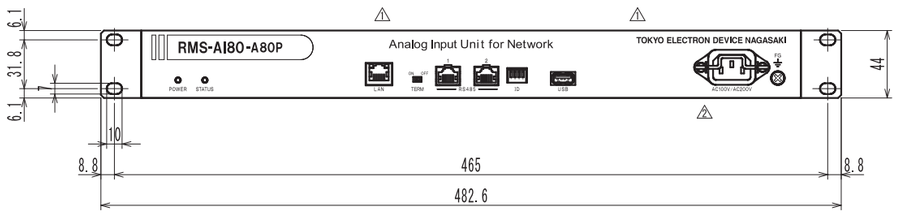
6.1
31.8
7
6.1
RMS-AI80-A80P
Analog Input Unit for Network
TOKYO ELECTRON DEVICE NAGASAKI
POWER
STATUS
LAN
TERM
RS485
ID
USB
AC100V/AC200V
FG
44
10
8.8
465
8.8
482.6

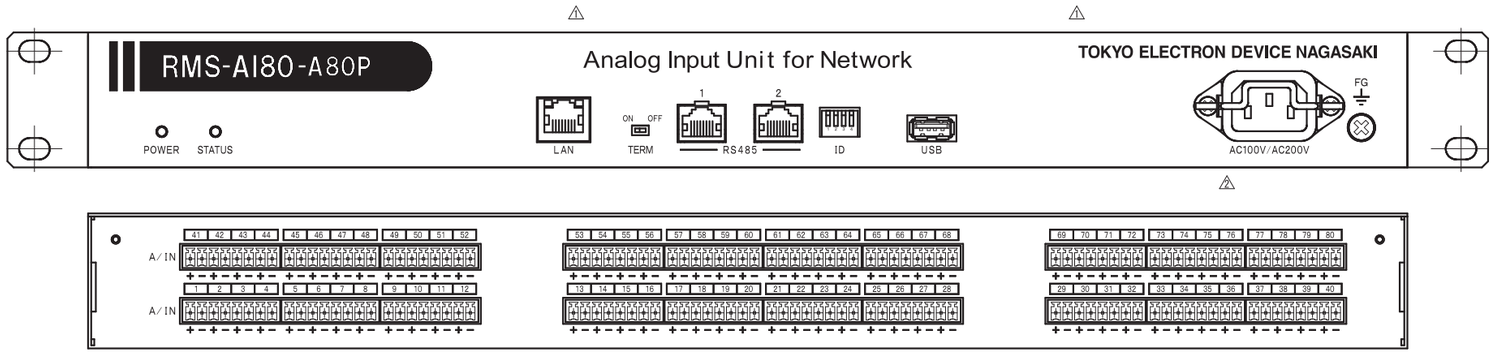
RMS-AI80-A80P
Analog Input Unit for Network
TOKYO ELECTRON DEVICE NAGASAKI
POWER
STATUS
LAN
ON OFF
TERM
1
2
RS485
ID
USB
FG
AC100V/AC200V
A/IN
A/IN